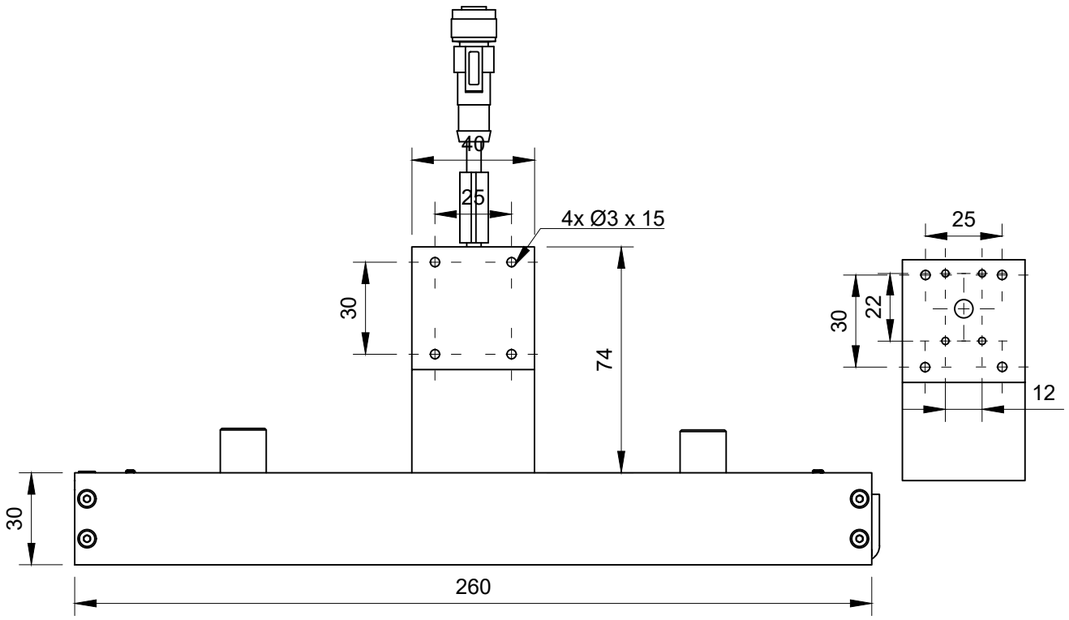

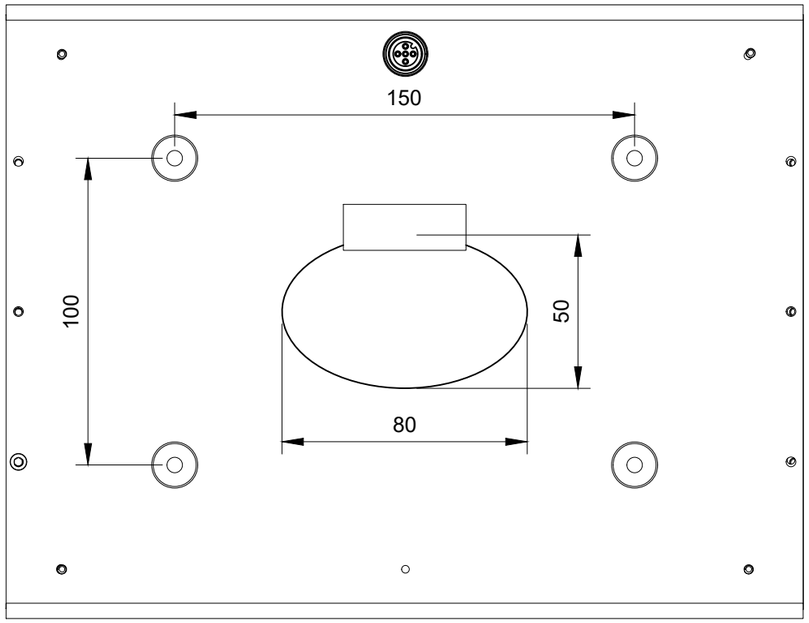

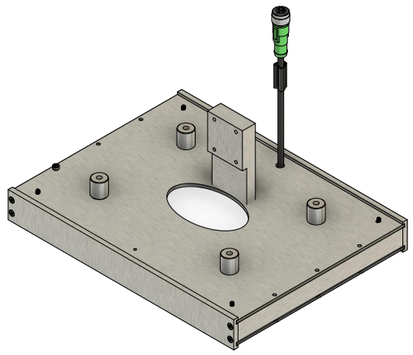

Input Voltage : + 24Vdc
Input Current : 2A , 1.5A
SMPS : 24V , 3A Min
Strobe : 5V ~24V Standard, 1V ~5V Opt
Colors : White, Red, Blue, Green, IR, UV

Diffuser : Medium (Std), Low, High
P-Filter : Option Available
Additional diffuers, filters may be used by top mounting.
Reccomended SMPS : 24V DC , 5Amp

For Continuous operation please use low current option or contact us.

Dept.	Technical reference	Created by P. Merchant 06-11-2020	Approved by	
PROTEUS electronics Excellence reborn		Document type Production	Document status	
		Title Ceres-BIS-W (*)V2	DWG No.	
			Rev. / Date of issue	Sheet 1/1